Technical data sheet

Product features

Fry Top Griddle 32x48 electric durable chrome smooth without cabinet 230 V / 1N		
Model	**SAP Code**	00020953
FTHC 30 EL	**A group of articles - web**	Grills and grill plates



- Top type: Smooth
- Griddle dimensions [mm x mm]: 320 x 480
- Griddle thickness [mm]: 10.00
- Container for liquid fat: Yes
- Maximum device temperature [°C]: 300
- Surface finish: durable chrome
- Removable rim: No

SAP Code	00020953	**Power electric [kW]**	3.000
Net Width [mm]	328	**Loading**	230 V / 1N - 50 Hz
Net Depth [mm]	609	**Griddle dimensions [mm x mm]**	320 x 480
Net Height [mm]	290	**Top type**	Smooth
Net Weight [kg]	23.00		

RM GASTRO, s.r.o.,
Třída Čs. armády 816,
391 81 Veselí nad Lužnicí 1, ID:49825062

Technical data sheet

Technical drawing

Fry Top Griddle 32x48 electric durable chrome smooth without cabinet 230 V / 1N		
Model	**SAP Code**	00020953
FTHC 30 EL	**A group of articles - web**	Grills and grill plates

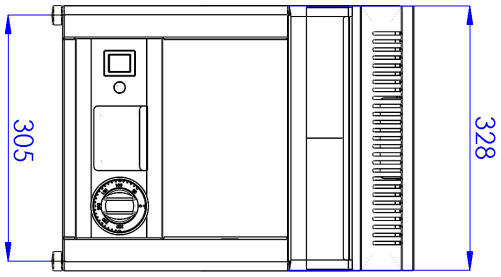

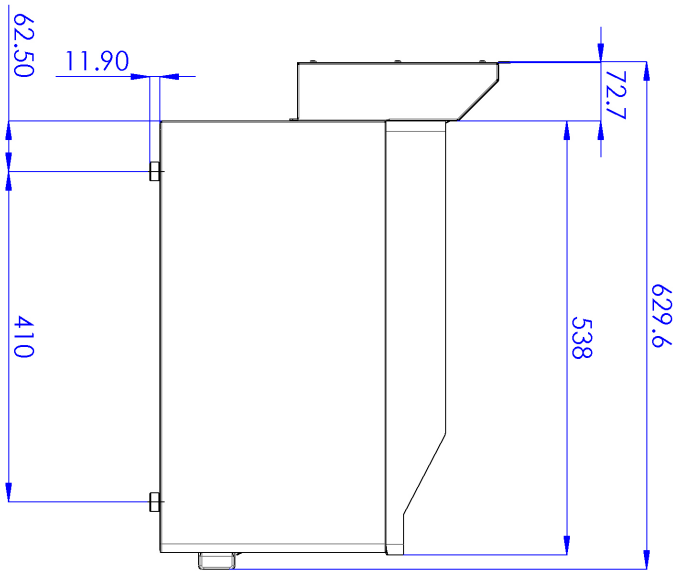

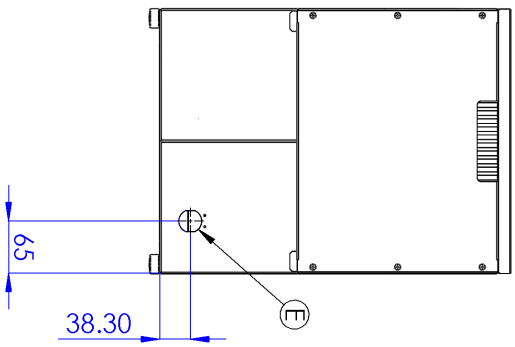

RM GASTRO, s.r.o.,
Třída Čs. armády 816,
391 81 Veselí nad Lužnicí 1, ID:49825062

Technical data sheet

Product benefits

Fry Top Griddle 32x48 electric durable chrome smooth without cabinet 230 V / 1N

Model	SAP Code	00020953
FTHC 30 EL	A group of articles - web	Grills and grill plates

1 **Nationheres**

long life
stainless steel resistance of AISI 304
the material does not rue

- Savings on service interventions
- easy cleaning of the device

2 **Degree of protection of controls IPX4**

maintenance -free
water resistance
long life

- Savings on service interventions
- easy cleaning of the device

3 **Waste fluid socket**

ensures oil dripping into a socket

- easy maintenance
- easy to clean

4 **Tall non -removable hem**

Better Hygienic Conditions
Preventing fat spraying on a secondary device

- easy maintenance
- easy to clean

5 **A smooth horn made of chrome steel**

The product is less baked and cleaned better
good warming of meat with groove

- saving time when preparing meals
- There is no disabled and long preparation of dishes

6 **A kernel for use on a table or on a bedding**

variable use
Possibility to place in smaller spaces

- easy manipulation
- saving costs on the bedding

RM GASTRO, s.r.o.,
Třída Čs. armády 816,
391 81 Veselí nad Lužnicí 1, ID:49825062

Technical data sheet

Technical parameters

Fry Top Griddle 32x48 electric durable chrome smooth without cabinet 230 V / 1N

Model	SAP Code	00020953
FTHC 30 EL	A group of articles - web	Grills and grill plates

1. **SAP Code:**
   00020953
2. **Net Width [mm]:**
   328
3. **Net Depth [mm]:**
   609
4. **Net Height [mm]:**
   290
5. **Net Weight [kg]:**
   23.00
6. **Gross Width [mm]:**
   395
7. **Gross depth [mm]:**
   705
8. **Gross Height [mm]:**
   482
9. **Gross Weight [kg]:**
   29.00
10. **Device type:**
    Electric unit
11. **Construction type of device:**
    Table top
12. **Power electric [kW]:**
    3.000
13. **Loading:**
    230 V / 1N - 50 Hz
14. **Protection of controls:**
    IPX4
15. **Material:**
    AISI 430
16. **Indicators:**
    operation and warm-up
17. **Surface finish:**
    durable chrome
18. **Maximum device temperature [°C]:**
    300
19. **Minimum device temperature [°C]:**
    50
20. **Adjustable feet:**
    Yes
21. **Griddle dimensions [mm x mm]:**
    320 x 480
22. **Griddle thickness [mm]:**
    10.00
23. **Container for liquid fat:**
    Yes
24. **Removable rim:**
    No
25. **Uniform heating:**
    Yes
26. **Top type:**
    Smooth
27. **Cross-section of conductors CU [mm²]:**
    0,75

RM GASTRO, s.r.o.,
Třída Čs. armády 816,
391 81 Veselí nad Lužnicí 1, ID:49825062